TRIAD PRODUCTIONS, INC.
1910 Ingersoll Ave.
Des Moines, Iowa 50309
515-243-2125 Phone
515-243-2055 Fax
www.triadav.com

TC-550 BART (Basic Animation Real Time) Controller

A BART is an ideal unit for distributed show control; small and versatile, it is ideal for many applications. The unit will read or generate SMPTE time code. It may be configured to generate up to sixty-four channels of DMX-512 lighting control. Alternately, it may have up to sixteen analog inputs or outputs. Sixteen digital inputs and sixteen digital outputs are standard on the motherboard but a remote I/O module may be added to increase that number. Individual outputs are configurable as to sink/source and voltage. There are data ports for adding up to 128 external outputs (TC-316/TC-3161 with appropriate support). There are four serial ports to interface with external devices requiring RS-232, RS-422, or RS-485.

Specifications

Size:	19"w x 10"d x 3.5"h
Recommended Power Supply:	Input 115VAC 60Hz Output +5VDC @ 1.2A (logic only) ±12VDC @ 0.1A (required for analog outputs only)
Weight:	4 lbs.
Heat Load:	Negligible
Inputs:	16 digital inputs, opto isolated
Outputs:	16 digital outputs, opto isolated (max 24VDC @ 100ma ea.)
Remote Outputs:	Up to 128 digital outputs (TC-316/TC-3161 required)
Remote:	4 inputs, 3 outputs
Mounting:	19 inch rack 2 RU
Communications:	4 configurable serial ports
Programming Language:	Synthesis (included)
16 Character ASCII Strings:	124
32 Character ASCII Strings:	62
Timed Events/Subroutines:	1000
Real Time Cue Data:	8 Meg

Price:	Please call Triad
Availability:	Off the shelf
Connectors:	DB-37M (logical inputs) DB-37F (digital outputs) 2 ea. RJ-12F RS-232 (serial A and B) 2 ea. DB-9F RS-232/422/485 (serial C and D) 5 pin DIN (power) 2 ea. DB-9M (4 DX outputs) BNC (SMPTE or video sync) SMPTE output DB-15F remote
Optional:	Remote I/O module Real time clock TC-336 16 channel analog output card 24V power supply (for 24V digital I/O) MIDI interface TC-316/TC-3161 16 channel digital output card

We believe this information to be correct and accurate at the time of printing. All specifications are subject to change. Triad will not be responsible for any damage related to any use of this equipment or documentation. All rights reserved.

TRIAD PRODUCTIONS, INC. • 1910 Ingersoll Ave. • Des Moines, Iowa 50309
Phone 515-243-2125 Fax 515-243-2055 www.triadav.com

TC-550 BART Controller

Jumpers

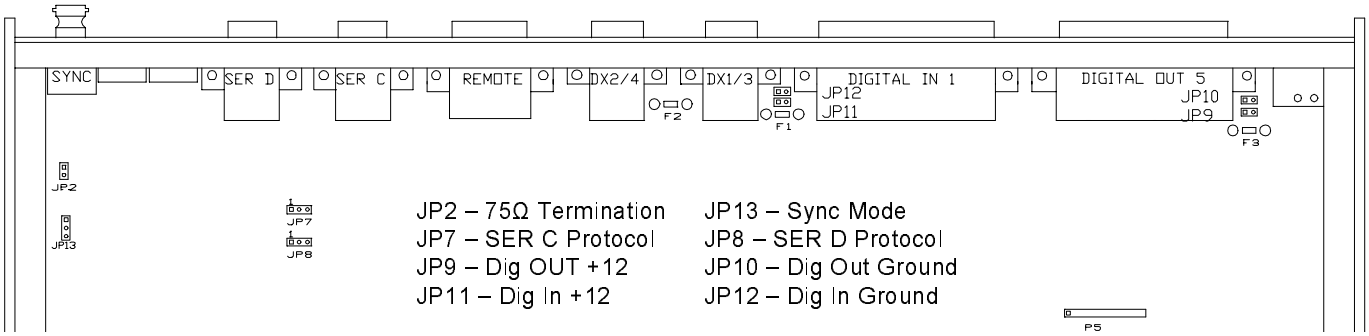

Back Panel

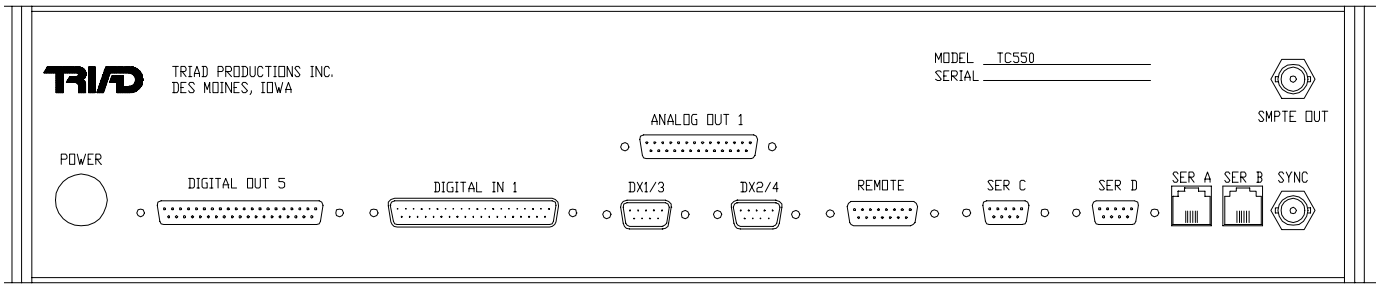

Notes

Programming is done on a standard PC and uploaded to on-board battery backed up RAM by connecting the serial ports on the PC and the BART. Triad's Synthesis program must be used for programming. Configuration of hardware settings is done by setting jumpers on the mother and/or daughter boards. Software settings may be made with a terminal program. Tally lights in the form of LED's echo the status of the inputs and outputs; these are viewed from the front panel. The optional analog input card or output card plugs into a socket on the motherboard. These are standard TC series cards.

The front panel contains an LCD display with two lines. The top line indicates the current time code being operated on by the BART (either internal or external, SMPTE or Pilot). The bottom line can be used to display user configurable messages up to sixteen characters long. These messages are downloaded with the program.

APPLICATIONS

- Board Room/Meeting Room Control
- Laser Disc/DVD Control
- Animation (Analog and Digital)
- Special Effects
- Projection Control/Video Wall Control
- Lighting (digital, analog 0-10, or DMX-512 control)
- Interactive displays and exhibits
- SMPTE decoding/synchronized applications
- SMPTE generation
- Stand-alone show control
- Expanded I/O for networked show control
- Touch-screen controller
- Many IR (Infrared) remote control possibilities

We believe this information to be correct and accurate at the time of printing. All specifications are subject to change. Triad will not be responsible for any damage related to any use of this equipment or documentation. All rights reserved.