TC326 DIGITAL INPUT
SINKING INPUT USING EXTERNAL POWER SUPPLY

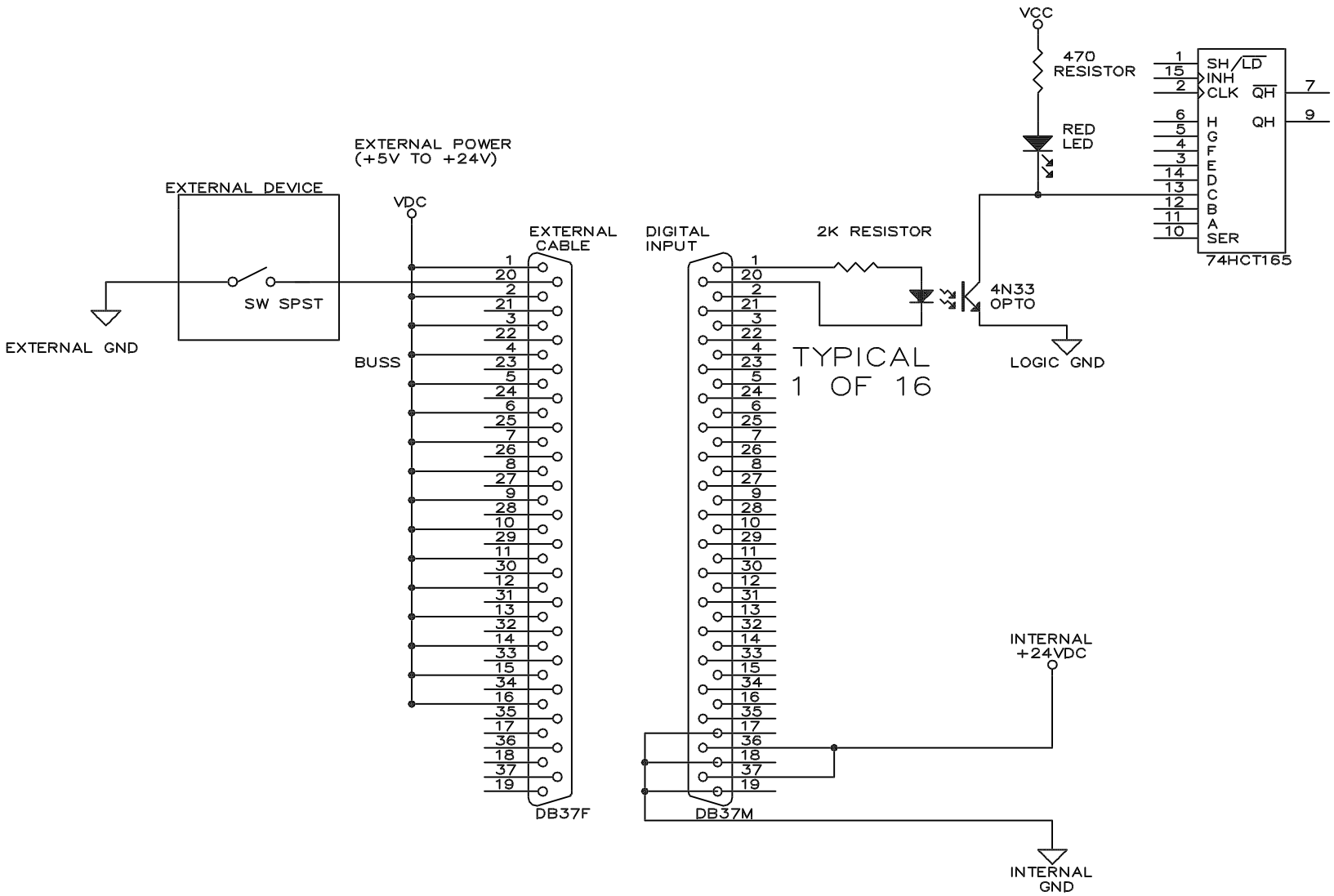

THIS DOCUMENT CONTAINS COPYRIGHTED MATERIAL AND CONFIDENTIAL TRADE SECRET INFORMATION BELONGING EXCLUSIVELY TO TRIAD PRODUCTIONS, INC. ANY UNAUTHORIZED USE, DISCLOSURE, DISSEMINATION OR DUPLICATION OF ANY OF THE INFORMATION CONTAINED HEREIN MAY RESULT IN LIABILITY UNDER APPLICABLE LAWS.

TRIAD PRODUCTIONS, INC.
5010 MUSKOGEE AVE.
SAN MARCOS, TEXAS 78666
PH (512) 392-7139
FAX (512) 392-3139
800 (800) 392-3139

APPROVED
CHECKED
DRAWN RPM

REV	DATE	BY	Notes and Comment
A	02/19/97	RPM	Initial Release

SHEET TC326 DIGITAL INPUT WIRING
PROJECT SINKING INPUT EXTERNAL P.S.
TRIAD PRODUCTIONS, INC.
5010 MUSKOGEE AVE.
SAN MARCOS, TX 78666
PH (512) 392-7139
FAX (512) 392-3139

DATE 02/19/97
SCALE NONE
SHEET NO. 1
REVISION NO. A
FOMINEX