TC326 DIGITAL INPUT
SINKING INPUT USING INTERNAL POWER SUPPLY

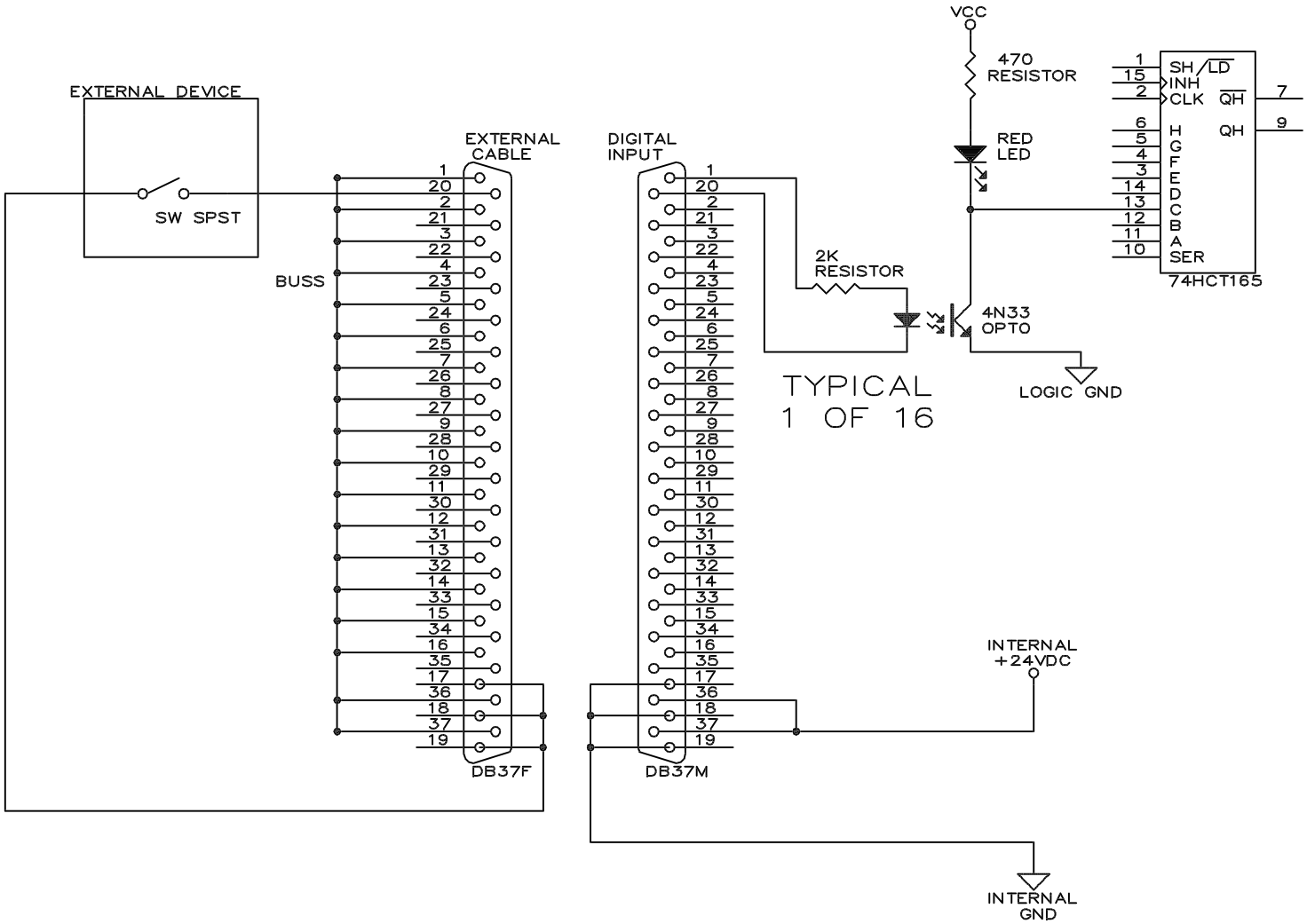

TRIAD PRODUCTIONS, INC.
5010 MARSHALL AVE.
SAN MARCOS, CA 92069
PH (619) 542-1130
FAX (619) 542-1135
800 (800) 542-1175

APPROVED
CHECKED
DRAWN RPM

REV	DATE	BY	Notes and Comment
A	02/19/97	RPM	Initial Release

SHEET TC326 DIGITAL INPUT WIRING
PROJECT SINKING INPUT INTERNAL P.S.
TRIAD PRODUCTIONS, INC.
5010 MARSHALL AVE.
SAN MARCOS, CA 92069
PH (619) 542-1130
FAX (619) 542-1135

DATE 02/19/97
SCALE NONE
SHEET NO. 1
REVISION NO. A
FINISH

THIS DOCUMENT CONTAINS COPYRIGHTED MATERIAL AND CONFIDENTIAL TRADE SECRET INFORMATION BELONGING EXCLUSIVELY TO TRIAD PRODUCTIONS, INC. ANY UNAUTHORIZED USE, DISCLOSURE, DISSEMINATION OR DUPLICATION OF ANY OF THE INFORMATION CONTAINED HEREIN MAY RESULT IN LIABILITY UNDER APPLICABLE LAWS.