TC316 LOGICAL OUTPUT
SINKING OUTPUT USING EXTERNAL POWER SUPPLY

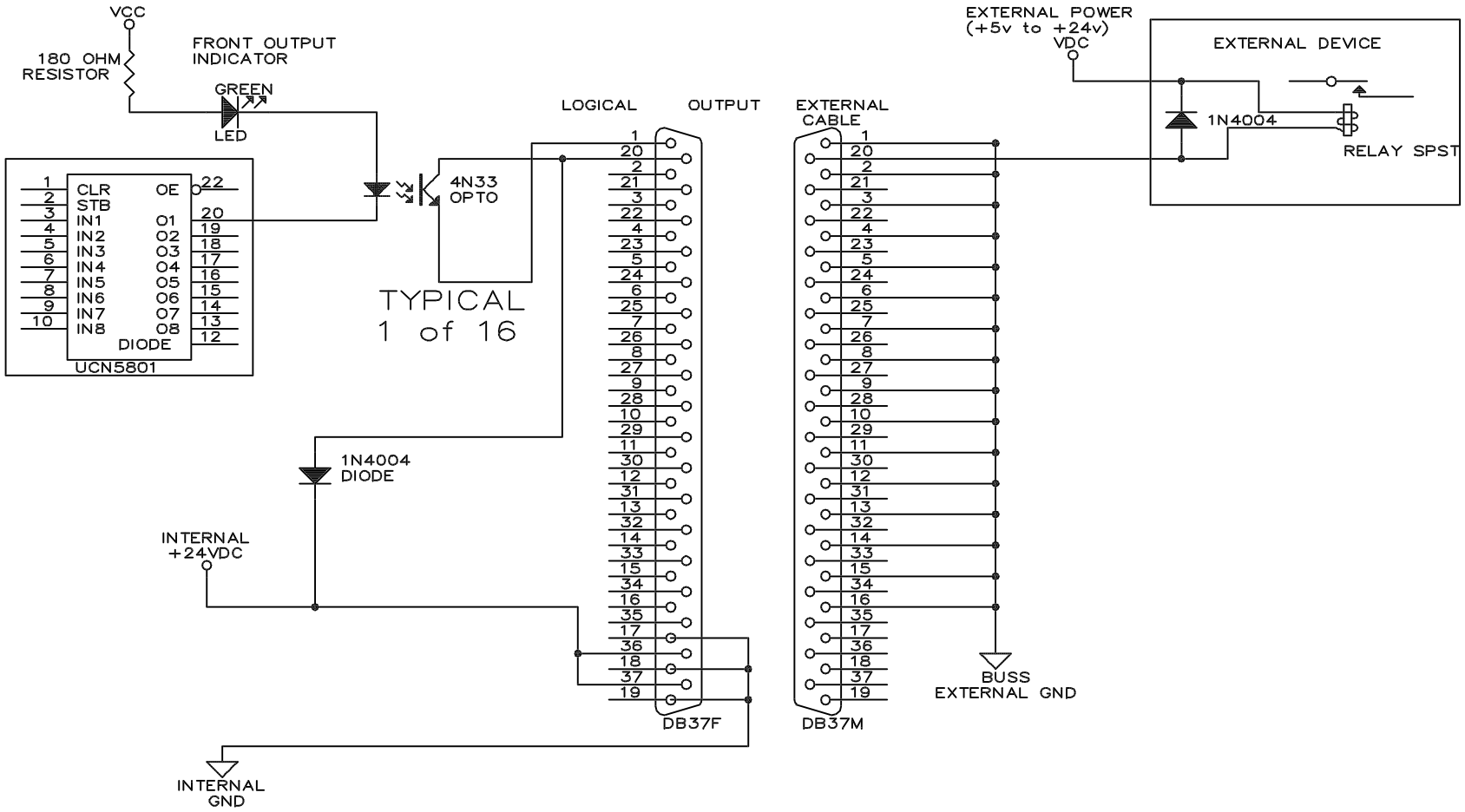

THIS DOCUMENT CONTAINS COPYRIGHTED MATERIAL AND CONFIDENTIAL TRADE SECRET INFORMATION BELONGING EXCLUSIVELY TO TRIAD PRODUCTIONS, INC. ANY UNAUTHORIZED USE, DISCLOSURE, DISSEMINATION OR DUPLICATION OF ANY OF THE INFORMATION CONTAINED HEREIN MAY RESULT IN LIABILITY UNDER APPLICABLE LAWS.

TRIAD PRODUCTIONS, INC.
5010 MERRIMAC AVE.
SAN MARCOS, CA 92069
PH (619) 542-1139
FAX (619) 542-1139
800 (800) 542-1139

APPROVED
CHECKED
DRAWN RPM

REV	DATE	BY	Notes and Comment
A			
A			
A			
A			
A			
A			
A	02/19/97	RPM	

SHEET TC316 LOGICAL OUTPUT WIRING
PROJECT SINKING OUTPUT EXTERNAL P.S.
TRIAD PRODUCTIONS, INC.
5010 MERRIMAC AVE.
SAN MARCOS, CA 92069
PH (619) 542-1139
FAX (619) 542-1139

DATE 02/19/97
SCALE NONE
SHEET NO. 1
REVISION NO. A
FD08KEX