TC316 LOGICAL OUTPUT
SOURCING OUTPUT USING EXTERNAL POWER SUPPLY

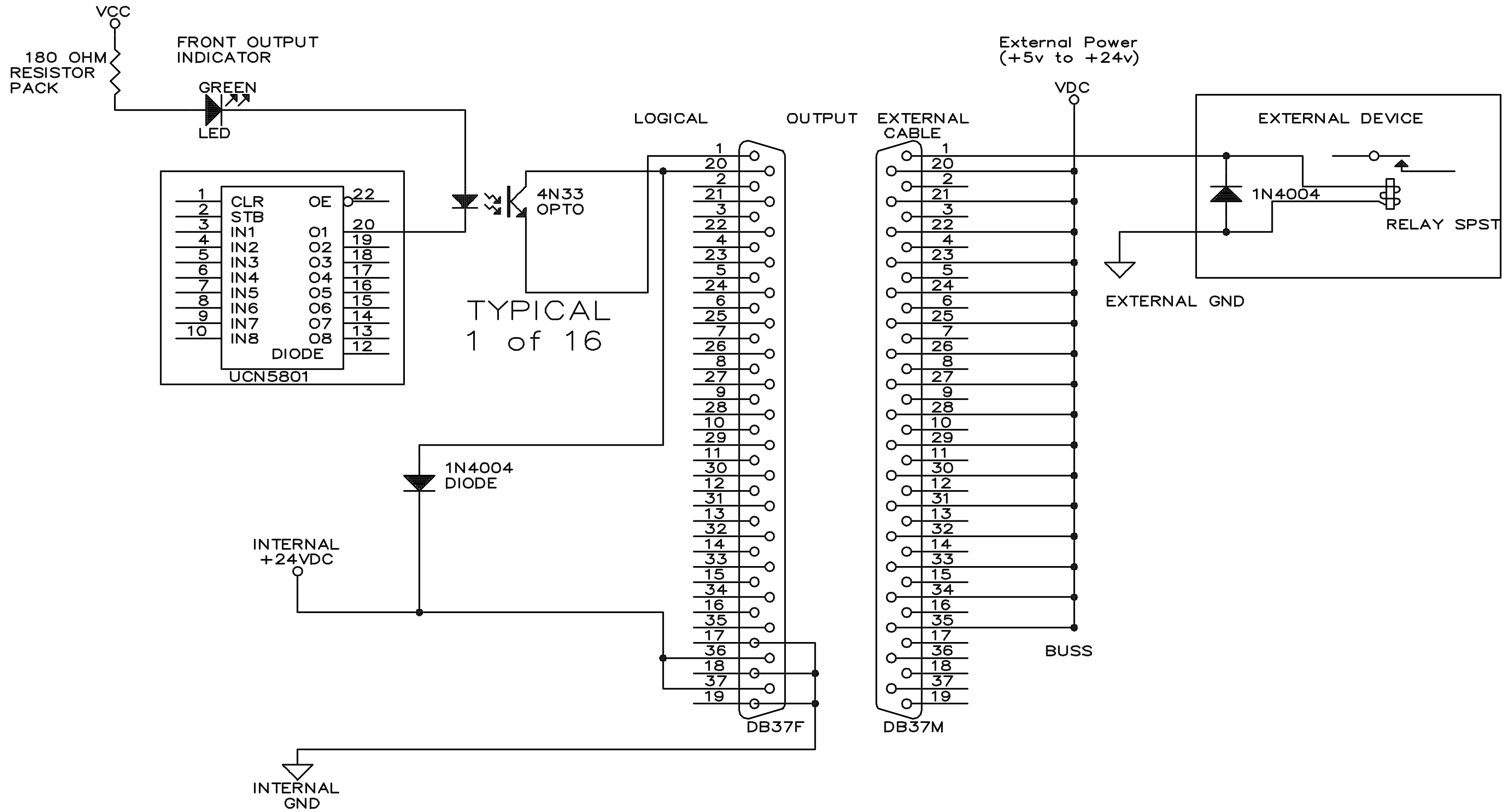

TRIAD PRODUCTIONS, INC.
1910 INGERSOLL AVE.
DES MOINES, IOWA 50309
PH (515) 243-2125
FAX (515) 243-2055
BBS (515) 243-2176

APPROVED
CHECKED
DRAWN RPH

SHEET: TC316 LOGICAL OUTPUT WIRING
PROJECT: SOURCING OUTPUT EXTERNAL P.S.
TRIAD PRODUCTIONS, INC.
1910 INGERSOLL AVE. DES MOINES, IA 50309
PH (515) 243-2125 FAX (515) 243-2055

DATE 02/15/97
SCALE none
SHEET NO. 1
REVISION NO. 1
FDOSREX

THIS DOCUMENT CONTAINS COPYRIGHTED MATERIAL AND CONFIDENTIAL TRADE SECRET INFORMATION BELONGING EXCLUSIVELY TO TRIAD PRODUCTIONS, INC. ANY UNAUTHORIZED USE, DISCLOSURE, DISSEMINATION OR DUPLICATION OF ANY OF THE INFORMATION CONTAINED HEREIN MAY RESULT IN LIABILITY UNDER APPLICABLE LAWS.